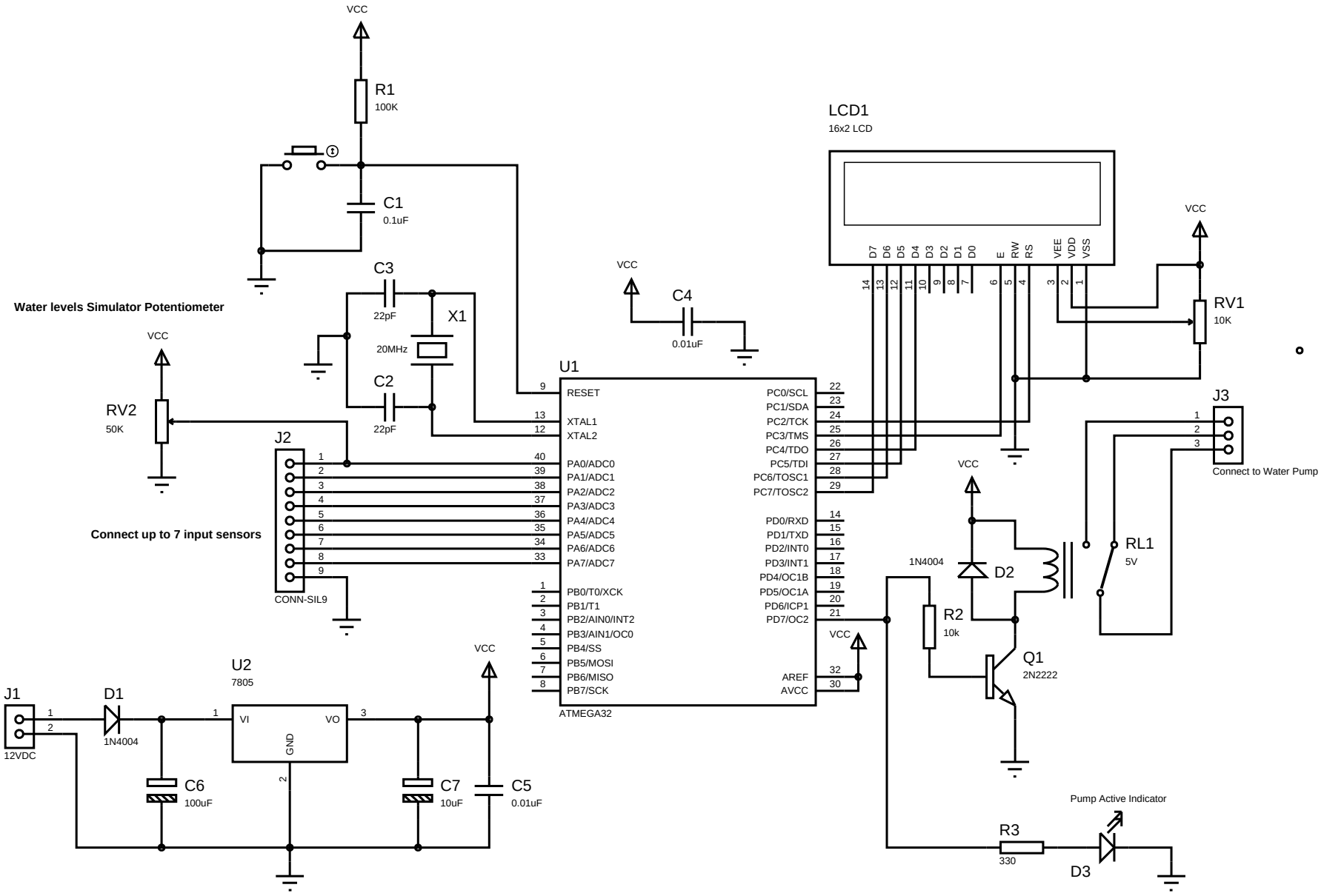
VCC
R1
100K
C1
0.1uF
C3
22pF
X1
20MHz
C2
22pF
Water levels Simulator Potentiometer
RV2
50K
J2
CONN-SIL9
Connect up to 7 input sensors
U1
ATMEGA32
RESET
XTAL1
XTAL2
PA0/ADC0
PA1/ADC1
PA2/ADC2
PA3/ADC3
PA4/ADC4
PA5/ADC5
PA6/ADC6
PA7/ADC7
PB0/T0/XCK
PB1/T1
PB2/AIN0/INT2
PB3/AIN1/OC0
PB4/SS
PB5/MOSI
PB6/MISO
PB7/SCK
PC0/SCL
PC1/SDA
PC2/TCK
PC3/TMS
PC4/TDO
PC5/TDI
PC6/TOSC1
PC7/TOSC2
PD0/RXD
PD1/TXD
PD2/INT0
PD3/INT1
PD4/OC1B
PD5/OC1A
PD6/ICP1
PD7/OC2
AREF
AVCC
C4
0.01uF
LCD1
16x2 LCD
D7 D6 D5 D4 D3 D2 D1 D0 E RW RS VEE VDD VSS
RV1
10K
J3
Connect to Water Pump
RL1
5V
D2
1N4004
R2
10k
Q1
2N2222
Pump Active Indicator
R3
330
D3
J1
12VDC
D1
1N4004
U2
7805
VI
VO
GND
C6
100uF
C7
10uF
C5
0.01uF